Inspection Certificate

Controlecertificaat ● Kontrollschein ● Bulletin de contrôle ● Certificato di controllo ● Certificado de control ● Kontrollskjema ● Kontrol Certifikat ● Tarkastustodistus ● Besiktningsprotokoll ● Kontrolní certifikát ● Pārbaudes akts ● Apžiūros pažyma ● Certyfikat kontrolny ● Certificado de Inspeção ● Kontrollakt

Art. Nr. FRG44-5541

Please keep safely!

Zorgvuldig te bewaren! ● Bitte gut aufbewahren! ● A bien conserver, s.v.p.! ● Da conservare! ● ¡A conservar! ● Ta vare på denne! ● Opbevares sikkert! ● Ole hyvä ja säilytä huolella! ● Vänligen förvara säkert! ● Prosím, pečlivě uschovejte! ● Lūdzu, glabājiet drošā vietā! ● Laikykite saugiai! ● Przechowywać w bezpiecznym miejscu! ● Por favor, guarde em segurança! ● Palun säilitada hoolsalt!

English: The product you have purchased was manufactured in accordance with the high quality norms. The product unit has been carefully inspected and packed. In order to avoid possible problems during the assembly carried out by yourself or the building company of your choice, we recommend that you inspect the delivery for its completeness in accordance with the list of pieces before assembly. This inspection must be carried out within 14 days after delivery to your place. Warranty claims are limited to the exchange of defective materials. Defective product parts, which have already been used or painted, are excluded from being replaced. All further claims are excluded! In cases of complaints, please pay attention to the following procedures: Please present this inspection certificate along with the sales receipt to your place of purchase. Only in cases where these documents are presented will the complaint be dealt with quickly and without complications.

Dutch: Het door U gekochte product werd vervaardigd overeenkomstig hoge kwaliteitsnormen. Het product werd zorgvuldig gecontroleerd en verpakt. Om tijdens de montage, uitgevoerd door Uzelf of een door U gekozen aannemer, problemen te vermijden, raden we U aan, vóór de montage de levering te controleren op volledigheid in overeenstemming met de onderdelenlijst. Deze controle dient te gebeuren binnen 14 dagen na levering bij U thuis. Garantieclaims zijn beperkt tot het vervangen van defecte onderdelen. Defecte onderdelen die al gebruikt of geschilderd zijn, zijn uitgesloten van vervanging. Alle latere claims zijn uitgesloten! In geval van klachten dient u als volgt te handelen: Toon dit controlecertificaat, samen met Uw aankoopbewijs aan Uw verkoper. Alleen wanneer deze documenten getoond worden, zal de klacht snel en zonder complicaties in behandeling worden genomen.

Deutsch: Der von Ihnen gekaufte Artikel wurde nach der hohen Qualitätsnorm gefertigt. Der Bausatz wurde sorgfältig geprüft und verpackt. Um etwaige auftretende Probleme während des Aufbaus durch Sie oder Ihre Aufbaufirma zu vermeiden, kontrollieren Sie bitte die Lieferung auf Vollständigkeit laut Stückliste vor dem Aufbau. Diese Kontrolle muss innerhalb 14 Tagen nach Anlieferung bei Ihnen erfolgen. Ansprüche auf Gewährleistung beschränken sich auf den Austausch von fehlerhaftem Material. Fehlerhafte Bauteile, die bereits verbaut oder gestrichen wurden, sind vom Umtausch ausgeschlossen. Alle weiteren Ansprüche sind ausgeschlossen! Sollte es zu einer Beanstandung kommen, beachten Sie folgende Vorgehensweise: Legen Sie Ihrem Fachhändler diesen Kontrollschein zusammen mit dem Einkaufsbeleg vor. Nur bei Vorlage dieser Unterlagen ist eine schnelle und problemlose Bearbeitung Ihrer Beanstandung möglich.

Français: Le produit que vous venez d'acheter a été fabriqué en respectant de hautes normes de qualité. Ce produit a été testé et emballé avec soin. Afin d'éviter des problèmes éventuels pendant la construction par vous-même ou par la société de construction mandatée, nous vous prions de bien vouloir vérifier que toutes les pièces ont été fournies selon la liste des pièces avant que vous ne commenciez la construction. Il vous incombe de faire ce contrôle dans les 14 jours après la fourniture. Les revendications en dédommagement se limitent à l'échange de matériel défectueux. Les pièces défectueuses, déjà construites ou peintes, ne font pas l'objet de l'échange. Toutes les revendications ultérieures ne sont pas prises en compte ! En cas d'une réclamation, veuillez respecter le déroulement suivant : il vous faudra présenter à votre commerçant agréé ce bulletin de contrôle avec le récépissé de l'achat. Ce ne sera que moyennant présentation de ces documents qu'un traitement rapide et sans problème de votre réclamation sera possible!

Italiano: Il prodotto che avete acquistato è stata prodotta secondo la norma di alta qualità. Il kit è stato controllato ed imballato con cura. Per evitare eventuali inconvenienti durante il montaggio, si prega di verificare, prima del montaggio, la completezza della fornitura in base alla distinta dei pezzi. Tale verifica deve essere effettuata entro 14 giorni dalla consegna. Eventuali diritti di garanzia si limitano alla sostituzione di materiale difettoso. Gli elementi difettosi già montati o verniciati sono esclusi dal diritto alla sostituzione. Ogni altro diritto resta escluso! In caso di reclamazione, procedere nel modo seguente: presentare questo certificato di controllo unitamente alla prova d'acquisto al rivenditore. Solo in questo modo la Sua reclamazione potrà essere evasa rapidamente e senza problemi.

Español: El producto que ha adquirido ha sido fabricada de acuerdo con normas de alta calidad. Las piezas del producto han sido cuidadosamente inspeccionadas y embaladas. Con el fin de evitar posibles problemas durante el montaje, hecho por usted o por la empresa de construcción de su elección, le recomendamos revisar el paquete entregado, con la lista de piezas, antes de armar el producto. Haga la revisión dentro de 14 días después de recibir el paquete. La garantía se limita a reemplazar las piezas defectuosas. No se reemplazarán las partes defectuosas que ya hayan sido utilizadas o pintadas. ¡No se aceptan otras reclamaciones! En casos de queja, por favor, presente este certificado junto con la factura en el lugar donde hizo la compra. Sólo presentando estos documentos podremos resolver su problema rápidamente y sin complicaciones.

Norsk: Produktet du har kjøpt, ble produsert i henhold til høye kvalitetskrav. Produktet har blitt kontrollert nøye og deretter omhyggelig pakket. For å unngå mulige problemer under monteringen, uansett om du gjør det selv eller får en godkjent håndverker til å gjøre det, anbefaler vi at du kontrollerer leveransen mot delelisten for å se om alle delene er inkludert. Denne kontrollen må gjøres innen 14 dager etter at delene ble levert til din adresse. Garantikrav begrenser seg til bytte av defekte deler. Defekte elementer som allerede har blitt brukt eller malt/beiset/limt, vil ikke bli erstattet. Alle andre krav er utelukket! Dersom du har en reklamasjon, vennligst gjør som følger: Lever dette kontrollskjema med kvitteringen til salgsstedet. Bare når du har med disse dokumentene kan klagen behandles raskt og uten komplikasjoner.

Dansk: Det købte produkt fremstillet i overensstemmelse med de høje kvalitets krav. Produktet er blevet omhyggeligt inspiceret og pakket. For at undgå eventuelle problemer i løbet af monteringen udført af dig selv eller håndværker af dit eget valg, anbefaler vi, at du undersøger leverancen for fuldstændighed i overensstemmelse med listen over dele før samling. Denne inspektion skal foretages inden 14 dage efter levering til din plads. Garantikrav er begrænset til udveksling af defekte materialer. Defekte produkter, som allerede er brugt eller malet, er udelukket fra at blive erstattet. Alle yderligere krav er udelukket! I tilfælde af klager, skal du være opmærksom på følgende procedurer: Venligst præsentere denne kontrol certifikat sammen med kvitteringen til det sted hvor produktet er købt. Kun i de tilfælde, hvor disse dokumenter er forelagt kan klagen behandles hurtigt og uden komplikationer.

Suomi: Ostamasi tuote on valmistettu korkeita laatuvaatimuksia noudattaen, huolella tarkastettu ja pakattu. Jotta pystytys joko itsesi tai valitsemasi rakennusliikkeen toimesta sujuisi ongelmitta, suosittelemme, että tarkistat toimituksen sisällön osaluettelon avulla ennen kokoamisen aloittamista. Tämä tarkistus tulee tehdä 14 päivän kuluessa toimituksesta. Takuuvaateet rajoittuvat viallisten materiaalien vaihtamiseen. Viallisia osia, joita on jo käytetty ja jotka on maalattu, ei vaihdeta uusiin. Lisävaatimuksia ei huomioida! Mahdollisissa valitustapauksissa toimi seuraavasti: Esitä oheinen tarkastustodistus ja kassakuitti ostopaikassa. Valituksen nopea ja mutkaton

käsittely edellyttää näiden asiakirjojen esittämistä.

Svenska: Produkten du köpt har tillverkats i enlighet med de högsta kvalitetsstandarderna. Produktens delar har noggrant besiktigats och förpackats. För att undvika eventuella problem under monteringen som du utför själv eller låter en hantverkare att utföra, rekommenderar vi att du, innan monteringen påbörjas, besiktigar leveransen för att säkerställa att den är komplett enligt förteckningen över ingående delar. Denna besiktning måste utföras inom 14 dagar efter att du tagit emot leveransen. Garantianspråk är begränsade till ersättning av defekt material. Defekta produktdelar, vilka redan har använts eller målats, ersätts inte. Alla vidare anspråk avvisas! I händelse av reklamationer, vänligen uppmärksamma följande: uppvisa detta besiktningsprotokoll tillsammans med inköpsbeviset till ditt inköpsställe. Endast om dessa dokument uppvisas kan vi garantera att reklamationen behandlas skyndsamt och utan krångel.

Čeština: Produkt, který jste zakoupil, byl vyroben v souladu s normami stanovujícími vysokou kvalitu. Produkt byl výrobcem pečlivě prohlédnutý a zabalený. Aby se předešlo možným problémům při montáži prováděné svépomocí nebo stavební firmou dle vašeho výběru, doporučujeme vám před montáží zkontrolovat dodávku na úplnost v souladu se seznamem dílů. Tato prohlídka musí být provedena do 14 dnů (!) od doručení do místa určení. Záruční nároky jsou omezeny na výměnu vadných materiálů. Vadné produkty, které již byly použity nebo které jsou již opatřeny nátěrem, nemohou být nahrazeny. Všechny další nároky jsou vyloučeny! V případě reklamace věnujte prosím pozornost tomuto postupu: Předložte svému prodejci tento kontrolní certifikát spolu s prodejním dokladem. Pouze v případě, kdy jsou předloženy oba tyto dokumenty, lze reklamaci řešit rychle a bez komplikací.

Latviešu: Produkts, kuru esat iegādājies, ir ražota saskaņā ar augstām kvalitātes normām. Šī produkta vienība ir rūpīgi pārbaudīta un iepakota. Lai izvairītos no iespējamiem sarežģījumiem montāžas laikā, kuru veicat jūs pats vai jūsu izvēlēts celtniecības uzņēmums, pirms montāžas iesakām pārbaudīt, vai piegādātajam izstrādājumam nekas netrūkst, izmantojot detaļu sarakstu. Šī pārbaude jāveic 14 dienu laikā pēc piegādāšanas. Garantija paredz tikai defektīvo materiālu apmaiņu. Defektīvas produkta detaļas, kuras jau ir izmantotas vai nokrāsotas, netiks mainītas. Visas turpmākās prasības tiks noraidītas! Sūdzību gadījumā, lūdzu, ievērojiet šādu kārtību: lūdzu, uzrādiet šo pārbaudes aktu kopā ar pirkuma čeku izstrādājuma iegādāšanās vietā. Sūdzība tiks atrisināta ātri un bez sarežģījumiem tikai tad, ja tiks uzrādīti šie dokumenti.

Lietuviškai: Produktas, kurį įsigijote, pagamintas pagal aukštos kokybės standartus. Produkto blokas, kurį reikia surinkti, buvo atidžiai patikrintas ir supakuotas. Siekiant išvengti galimų problemų surenkant produktą patiems arba pasirinkus tam norimą statybos bendrovę, prieš surenkant rekomenduojame patikrinti pristatymo komplektaciją pagal dalių sąrašą. Ši patikra turi būti atlikta per 14 dienų nuo pristatymo į jūsų nurodytą vietą. Garantinės sąlygos taikomos tik brokuotoms dalims. Brokuotos produkto dalys, kurios buvo panaudotos arba nudažytos, nebekeičiamos. Visos kitos pretenzijos nesvarstomos! Jei teikiate pretenziją, atkreipkite dėmesį į šias procedūras: į produkto įsigijimo vietą turite pristatyti apžiūros pažymėjimą bei pirkimo kvitą. Tik tais atvejais, kai pristatomi minėti dokumentai, pretenzija gali būti nagrinėjama greitai ir be komplikacijų.

Polski: Produkt, który Państwo zakupili, wykonano według najwyższych norm jakości. Elementy konstrukcyjne przed zapakowaniem przeszły dokładną kontrolę jakości. Aby uniknąć problemów podczas samodzielnego montażu, bądź montażu zleconego firmie budowlanej, przed montażem zalecamy sprawdzenie zawartości przesyłki zgodnie z listą części zamieszczonych w zestawie. Kontroli kompletności zestawu należy dokonać w ciągu 14 dni od dostarczenia przesyłki. Reklamacje objęte gwarancją ograniczają się do wymiany wadliwych elementów. Wadliwe elementy, które zostały użyte lub pomalowane nie będą podlegały wymianie ani dalszym reklamacjom. W przypadku potrzeby zgłoszenia reklamacji, prosimy przestrzegać poniższych procedur: prosimy przedłożyć Certyfikat kontrolny wraz z paragonem zakupu i adresem dostawy. Reklamacje będą rozpatrywane wyłącznie po dostarczeniu powyższych dokumentów.

Portuguesa: O produto que comprou foi fabricado em conformidade com as normas de alta qualidade. A unidade do produto foi cuidadosamente inspecionada e embalada. Para evitar possíveis problemas durante a montagem realizada por si ou pela empresa de construção à sua escolha, recomendamos que inspecione a entrega na íntegra, em conformidade com a lista de peças antes da montagem. Esta inspeção deve ser realizada no prazo de 14 dias após a entrega. As reclamações de garantia limitam-se à troca de materiais defeituosos. As peças do produto com defeito, que já tenham sido utilizadas ou pintadas, excluem-se da substituição. Excluem-se todas as outras reclamações! Em caso de reclamações, por favor, tome atenção aos seguintes procedimentos: Por favor, apresente este certificado de inspeção, juntamente com o recibo de venda no seu local de compra. Apenas nos casos em que estes documentos sejam apresentados a queixa será tratada com rapidez e sem complicações.

Eesti: Ostetud toode on toodetud vastavuses kõrgete kvaliteedi normidega. Toote ühik on hoolikalt kontrollitud ja pakendatud. Et vältida võimalikke probleeme paigaldamisel, mida teostate ise või teostab teie poolt valitud paigaldusettevõte, soovitame enne paigaldama asumist kontrollida toote komplekssust detailide nimekirja alusel, mille leiate kaasas olevast juhendist. See kontroll tuleb teostada 14 päeva jooksul pärast tarnet. Garantii alla kuuluvad kaebused on piiratud defektsete detailide välja vahetamisega. Defektsed detailid, mida on juba kasutatud või värvitud, ei kuulu garantiikorras välja vahetamisele. Kõik edasised kaebused on välistatud! Kaebuste korral palun pöörake tähelepanu järgnevale: palun hoidke see kontrollakt koos müügiarvega alles. Ainult nende dokumentide esitamisel lahendatakse kaebused kiiresti ja ilma komplikatsioonideta.

Factory inspection by ● Fabriekscontrole door ● Werkskontrolle durch ● Contrôle à partir de l'usine par ● Collaudato da ● Inspector de fábrica ● Fabrikkkontroll utført av ● Fabriks Kontrol udført af ● Tehtaan tarkastaja ● Fabriksbesiktigat av ● Zkontrolováno ve výrobním závodě ● Rūpnīcas pārbaudi veicis ● Apžiūrą gamykloje atliko ● Kontrola fabryczna do ● Inspeção de fábrica, por: ● Tehase kontroll teostatud: ……..	**Pack number** ● Pack Nr. ● Pack Nr.● Packet n° ● Pacco N. ● Paquete Nº ● Serienr ● Pakettinro ● Produktionsnummer ● Číslo paketu ● Iepakojuma numurs ● Pakuotės numeris ● Nnumer opakowania ● Número de embalagem ● Pakinumber: ……. **Date** ● Datum ● Date ● Data ● Fecha ● Dato ● Päiväys ● Datum ● Datums ● Kuupäev: ….....…….

To be completed by buyer! (Please use block letters) ● In te vullen door de verkoper! (Graag in drukletters) ● Vom Käufer auszufüllen! (Bitte in Druckschrift) ● A remplir par l'acheteur! (en lettres d'imprimerie, s'il vous plaît) ● Da compilare dall'acquirente! (in stampatello) ● ¡Completa el cliente! (en mayúsculas) ● Fylles ut av kjøper! (Vær vennlig å bruke blokkbokstaver) ● Udfyldes af køber! (Benyt venligst Blokbogstaver) ● Ostaja täyttää! (Ole hyvä ja käytä isoja kirjaimia) ● Fylls i av köparen! (Vänligen texta) ● Vyplní kupující! (Prosíme hůlkovým písmem) ● Aizpilda pircējs! (Lūdzu, izmantojiet drukātos burtus.) ● Pildo pirkėjas (didžiosiomis raidėmis)! ● Wypełnia nabywca (drukowanymi literami) ● A completar pelo fabricante! (por favor escreva em letra de máquina) ● Täidetakse ostja poolt! (palun täita trükitähtedes):

Place of purchase ● Plaats van aankoop ● Bezugsquelle ● Source d'achat ● Acquistato presso ● Lugar de compra ● Salgssted ● Salgs sted ● Ostopaikka ● Inköpsställe ● Místo nákupu ● Iegādāšanās vieta ● Įsigijimo data ● Miejsce zakupu ● Local de compra ● Ostukoht:

……

……

Sales receipt No. ● Aankoopbewijs Nr. ● Kaufbeleg-Nr. ● Récépissé n° ● Prova d'acquisto N. ● Recibo Nº ● Kvitteringsnr ● Kasse Bon nr ● Kassakuitin numero ● Försäljningskvittots nummer ● Prodejní doklad č. ● Pirkuma čeka Nr. ● Pardavimo kvito Nr. ● Nr paragonu ● Recibo de venda n.º ● Müügiarve number:

……

Sales receipt date ● Aankoopbewijs -Datum ● Kaufbeleg-Datum ● Date du récépissé ● Data prova d'acquisto ● Fecha recibo ● Kvitteringsdato ● Kasse bons dato ● Kassakuitin päiväys ● Försäljningskvittots daatum ● Datum prodejního dokladu ● Pirkuma čeka datums ● Pirkimo kvito data ● Data paragonu ● Data do recibo de venda ● Müügiarve kuupäev:

……

Delivery date ● Leveringsdatum ● Lieferdatum ● Date de livraison ● Data di consegna ● Fecha de Endrega ● Leveringsdato ● Leverings dato ● Toimituspäivä ● Leveransdatum ● Termín dodání ● Piegādes datums ● Pristatymo data ● Data dostawy ● Data de entrega ● Tarne kuupäev:

……

Buyer's address ● Adres koper ● Kundenanschrift ● Adresse du client ● Indirizzo del cliente ● Dirección del kliente ● Kjøpers adresse ● Købers adresse ● Ostajan osoite ● Köparens adress ● Adresa kupujícího ● Pircēja adrese ● Pircēja adrese ● Pirkėjo adresas ● Adres nabywcy ● Morada do comprador ● Ostja aadress:

……

……

……

Telephone ● Telefoon ● Telefon ● Téléphone ● Teléfono ● Telefon ● Telefon nr ● Puhelin ● Telefon ● Telefon ● Tālrunis ● Telefonas ● Telefon ● Telefone ● Telefon:

……

Forwarder: ☐ **Pick-up** ☐ **Others** ● Door: ☐ Verzending ☐ Zelf ● Afhalen: ☐ Spedition ☐ Selbstabholer ● Par: ☐Transporteur ☐ Propres moyens ● Tramite: ☐ Spedizioniere ☐ Mezzo proprio ● Entrega:Transporte organizado ☐ transporte propio ● Transportør: ☐ Sendes ☐Hentes ● Transportør: ☐Sendes ☐Hentes ● Rahdinkuljettaja: ☐Nouto ☐Muut ● Speditör: ☐Avhämtning ☐Övrigt ● Zasílatel: ☐Sběrná služba ☐Ostatní ● Ekspeditors: ☐ Saņemšana uz vietas ☐ Cits ● Ekspeditorius: ☐ „Pick-up " ☐ Kita ● Przekazywanie: ☐ odbiór w sklepie ☐ Inne ● Remetente: ☐ Entrega ☐ Outros ● Transport: ☐ Järgi tulemine ☐ Muu

Description of complaint ● Beschrijving van de klacht ● Schilderung der Beanstandung ● Déscription de la réclamation ● Descrizione della reclamazione ● Descripción del problema ● Beskrivelse av feil/ mangel ● Beskrivelse af fejl / Mangel ● Valituksen kuvaus ● Beskrivning av reklamationen ● Popis reklamace ● Sūdzības apraksts ● Skundo aprašymas ● Opis reklamacji ● Descrição da reclamação ● Kaebuse kirjeldus: **Please keep the parts which are the object of the complaint until the complaint is settled!** ● Gelieve de betrokken onderdelen te bewaren tot de klacht is afgehandeld ● Veuillez garder les pièces contestées jusqu'à ce que la réclamation soit traitée définitivement! ● Si prega di conservare i pezzi reclamati fino all'evasione della reclamazione! ● Por favor, conserve las piezas objeto de la queja hasta que el problema haya sido resuelto ● Please Vær vennlig å ta vare på de aktuelle delene/ produktet inntil saken er avsluttet! ● Venligst ta hånd om de aktueller dele / produkt indtil sagen er afsluttet! ● Ole hyvä ja säilytä osat, joita valitus koskee, kunnes valitus on käsitelty! ● Vänligen behåll delarna som är föremål för reklamation tills reklamationen har behandlats! ● Uchovejte prosím díly, které jsou předmětem stížnosti, dokud reklamace nebude vyřízena! ● Lūdzu, saglabājiet detaļas, uz kurām sūdzība attiecas, līdz sūdzība tiek atrisināta! ● Dalis, kurios yra skundo objektas, reikia išsaugoti tol, kol skundas bus išnagrinėtas! ● Prosimy zachować części będące przedmiotem reklamacji do czasu jej rozpatrzenia. ● Por favor, guarde as peças objeto da reclamação, até que a reclamação esteja resolvida! ● Palun hoidke kaebust puudutavad objektid/detailid alles, kuni kaebus on lahendatud!

……

……

……

……

……

……

……

……

……

……

……

……

……

……

……

……

Installation manual

Montageanleitung ● Notice de montage ● Istruzioni per il montaggio
Manual de montaje ● Monteringsanvisning ● Installatiegids

Log cabin FRG44-5541

Blockhaus ● Maisonnette en poutres ● Casa di travi ● Casa de jardin ● Anneks ● Tuinhuis

Width 550 x Depth 410 cm

Breite/Tiefe ● Largeur/Profondeur ● Lunghezza/Profondita ● Ancho/Profundidad ● Bredde/Dybde ● Breedte/Diepte

Log thickness 44 mm

Bohlenstärke ● Épaisseur des murs ● Spessore delle pareti ● Grosor de pared ● Tykkelse ● Wanddikte

The producer shall have the right to make technical changes to the product ● Technische Änderungen vorbehalten ● Le producteur réserve le droit d'effectuer des modifications techniques au produit ● Il produttore mantiene il diritto di apportare modifiche tecniche al prodotto ● Reservado el derecho a modificaciones técnicas ● Produsent forbeholder seg retten til å endre tekniske egenskaper ved produktet ● Alle rechten en technische wijzigingen voorbehouden

H = 1.500 m
TOTAL: 19.87 m2

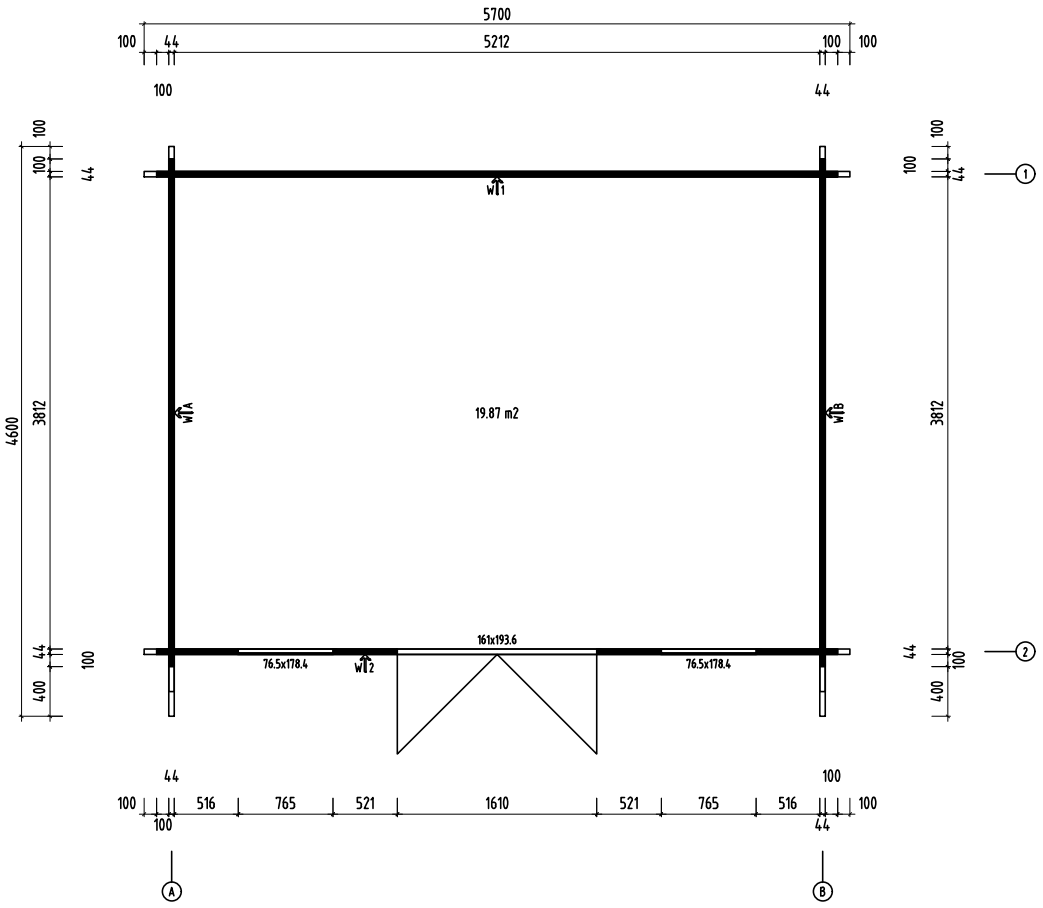

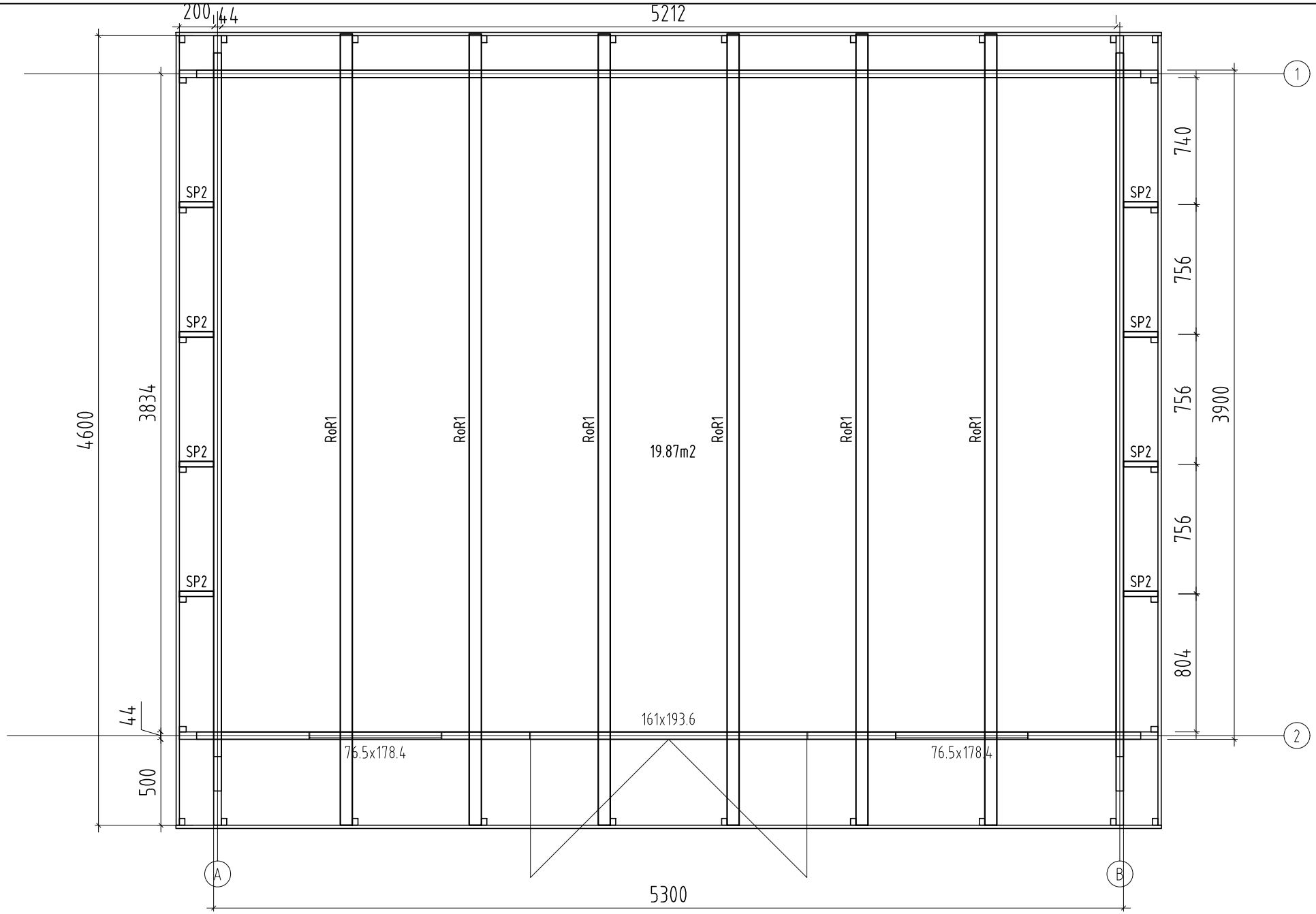
200
44
5212
1
2
740
756
756
756
804
3900
SP2
SP2
SP2
SP2
SP2
SP2
SP2
SP2
4600
3834
44
500
RoR1
RoR1
RoR1
RoR1
RoR1
RoR1
19.87m2
161x193.6
76.5x178.4
76.5x178.4
A
B
5300

Pos	SPECIFICATION-STÜCKLISTE-NOMENCLATURE-ELEMENTI-ESPECIFICATIÓN "FRG44-5541"	Pcs	Profile (mm)	Length (mm)
001	100 5212 100	1	44x57	5500
002	100 5212 100	20	44x114	5500
003	100 5212 100	1	44x114	5500
004	200 694	1	44x50	938
005		5	44x50	681
006	694 200	1	44x50	938
007	1796 100	2	44x57	1940
008	1796 100	2	44x114	1940
009	511 100	32	44x114	655
010		32	44x114	510
011	100 5212 100	1	44x114	5500
012	200 694	1	44x100	938
013		5	44x100	681
014	694 200	1	44x100	938
015	100 3812 100	38	44x114	4100
WA-1	292 018 017 016 4600	1		
WB-1	292 018 017 016 4600	1		
CoB3	Covering board- Deckbrett- Madrier de couverture- Tavola di copertura- Listón de cubierta	2	19x70	4500
CoB2	Covering board- Deckbrett- Madrier de couverture- Tavola di copertura- Listón de cubierta	2	19x70	3194
CoB1	Covering board- Deckbrett- Madrier de couverture- Tavola di copertura- Listón de cubierta	2	19x70	2546
Rai8	Railing board- Geländer- Barre de rambarde- Tavola di ringhiera- Tabla de barandilla	2	114x19	4600
Rai7	Railing board- Geländer- Barre de rambarde- Tavola di ringhiera- Tabla de barandilla	2	114x19	4600
Rai4	Railing board- Geländer- Barre de rambarde- Tavola di ringhiera- Tabla de barandilla	2	114x19	3194
Rai1	Railing board- Geländer- Barre de rambarde- Tavola di ringhiera- Tabla de barandilla	2	114x19	3194
Rai3	Railing board- Geländer- Barre de rambarde- Tavola di ringhiera- Tabla de barandilla	2	114x19	2546

Pos	SPECIFICATION-STÜCKLISTE-NOMENCLATURE-ELEMENTI-ESPECIFICATIÓN "FRG44-5541"	Pcs	Profile (mm)	Length (mm)
Rai2	Railing board- Geländer- Barre de rambarde- Tavola di ringhiera- Tabla de barandilla	2	114x19	2546
Rai9	Railing board- Geländer- Barre de rambarde- Tavola di ringhiera- Tabla de barandilla	2	105x19	4600
Rai5	Railing board- Geländer- Barre de rambarde- Tavola di ringhiera- Tabla de barandilla	2	105x19	3194
Rai6	Railing board- Geländer- Barre de rambarde- Tavola di ringhiera- Tabla de barandilla	2	105x19	2546
RoR1	Rafter- Sparre- Chevron- Trave- Cabrio	6	70x140	4610
SP1	Support brace- Stützleiste- Baguette de support- Listello di supporto- Listón de soporte	32	32x40	300
SP2	Support brace- Stützleiste- Baguette de support- Listello di supporto- Listón de soporte	8	32x40	200
WiB1	Window bars- Fenstersprossen- Grilles fenêtres- Finestra barre- Listones embellecedores	8	70x19	626
RB2-1	Roof board- Dachbrett- Madrier du toit- Tavola tetto- Tabla de tejado	52	89x19	3225
RB2-2	Roof board- Dachbrett- Madrier du toit- Tavola tetto- Tabla de tejado	52	89x19	2475
RE2-1	Roof edge reinforcement- Dachrandleiste- Baguette en bordure du toit- Rinforzo bordo tetto- Refuerzo borde tejado	2	32x40	155
RE2-2	Roof edge reinforcement- Dachrandleiste- Baguette en bordure du toit- Rinforzo bordo tetto- Refuerzo borde tejado	2	32x40	455
RE2-3	Roof edge reinforcement- Dachrandleiste- Baguette en bordure du toit- Rinforzo bordo tetto- Refuerzo borde tejado	2	32x40	3810
QTihendTPE 8mm-1	Seal- Gummidichtung- Joint d'isolation- Guarnizone- Burlete	1		5600
SiS5-1	Side slat - Randleiste - Baguette en bordure - Listello bordo 5	2	28x45	1686
Sis1-1	Side slat- Randleiste- Baguette en bordure- Listón de borde- Listello bordo	4	19x70	729
Sis1-2	Side slat- Randleiste- Baguette en bordure- Listón de borde- Listello bordo	8	19x70	1812
Sis2-1	Side slat- Randleiste- Baguette en bordure- Listón de borde- Listello bordo	4	19x95	869
StB1-1	Storm brace- Sturmleiste- Protection contre le vent- Antivento- Protector contra tormentas	2	25x45	2200
StB1-2	Storm brace- Sturmleiste- Protection contre le vent- Antivento- Protector contra tormentas	2	25x45	2300
Fim	-Fixing kit- Befestigungsset- Moyens de fixation- Materiale di fissaggio- Kit de fijación	1	USE	
QPUP 08x80	Bolt -Schloss-schraube -Boulon- Bullone- Perno- M8x80mm PUPO	8	TU44 -50R	
QULSydamik 30/35	Cylinder- Zylinderschloss- Serrure a mortaiser- Serratura a cilindro- Bombin- 30.35	1	TU44 -50R	
QULKateHOBEk	Door fittings- Türbeschlag- Ferrure- Ferramenta porta- Manilla puerta- QULKateHOBEk	1	TU44 -50R	
QULinkHOBE	Door fittings- Türbeschlag- Ferrure- Ferramenta porta- Manilla puerta- QULlinkHOBE	1	TU44 -50R	

Pos	SPECIFICATION-STÜCKLISTE-NOMENCLATURE-ELEMENTI-ESPECIFICATIÓN "FRG44-5541"	Pcs	Profile (mm)	Length (mm)
QServariiviv astus120	Keeper- Schliessblech- Tole- Lamiera- Aldaba de candado	1	TU44 -50R	
QNA2_2x50Zn	Nail- Nagel- Clou- Chiodo- Clavo- 2.5x50mm	520		
QNLP2 5x60Zn	Nailing plate- Nagelplatte- Connecteur métallique- Piastra connettore- Placa del clavo 57x25x2	6	001;002 007;008	
QMU8	Nut- Schraubenmutter- Écrou- Dado- Tuerca- M8mm	8		
QKR2_5 x16kZN	Screw- Schraube- Vis- Vite- Tornillo- 2.5x16mm	2		
QKR4_5x50ZN	Screw- Schraube- Vis- Vite- Tornillo- 4.5x50mm	520	Raix+SP1;SP1+RB1-x CoBx ; RE2-x+RB1-x; Sisx-x...	
QKR4_5x60ZN	Screw- Schraube- Vis- Vite- Tornillo- 4.5x60mm	16	SP1+SP2	
QKR4_5x70ZN	Screw- Schraube- Vis- Vite- Tornillo- 4.5x70mm	60	SP1+RoR1 001; 004; 006; 007...	
QKR4 x25ZN	Screw- Schraube- Vis- Vite- Tornillo- 4x25mm	24		
QKR4x 35kZN	Screw- Schraube- Vis- Vite- Tornillo- 4x35mm kZn	32	WiB1	
QKR5 x90ZN	Screw- Schraube- Vis- Vite- Tornillo- 5x90mm	42	TU44-50R (4pcs) SP2+Wall (004;005)+RoR1	
QKR6x 180ZN	Screw- Schraube- Vis- Vite- Tornillo- 6x180mm	12	RoR1+Wall	
QSE8x22	Washer- Dichtscheibe- Joint- Rondella- Arandela- 8x22mm	8		
QALinkHOBE	Window fittings- Fenstergriff- Poigne de la fenétre- Maniglia finestra- Manilla (ventana)	4	A44-38L A44-38R	
A44-38L	Window - Fenster - Fenetre - Finestra-Ventana 765x1784 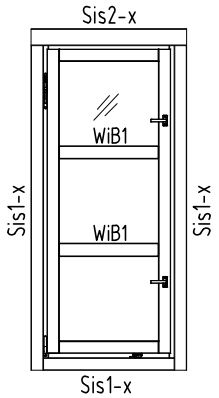 649x1668mm	1		

Object name "FRG44-5541"

Pos	SPECIFICATION-STÜCKLISTE-NOMENCLATURE-ELEMENTI-ESPECIFICATIÓN "FRG44-5541"	Pcs	Profile (mm)	Length (mm)
A44 -38R	Window - Fenster - Fenetre - Finestra-Ventana 765x1784 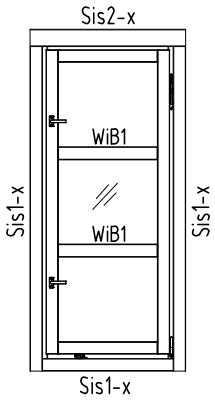 649x1668mm	1		
TU44 -50R	Door - Tür - Porte - Porta-Puerta 1610x1936 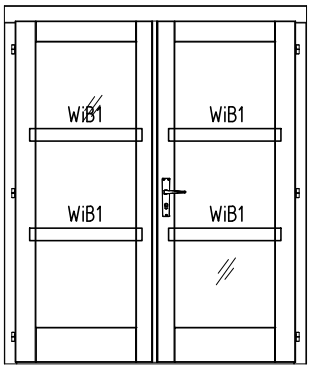 1510x1867mm	1		

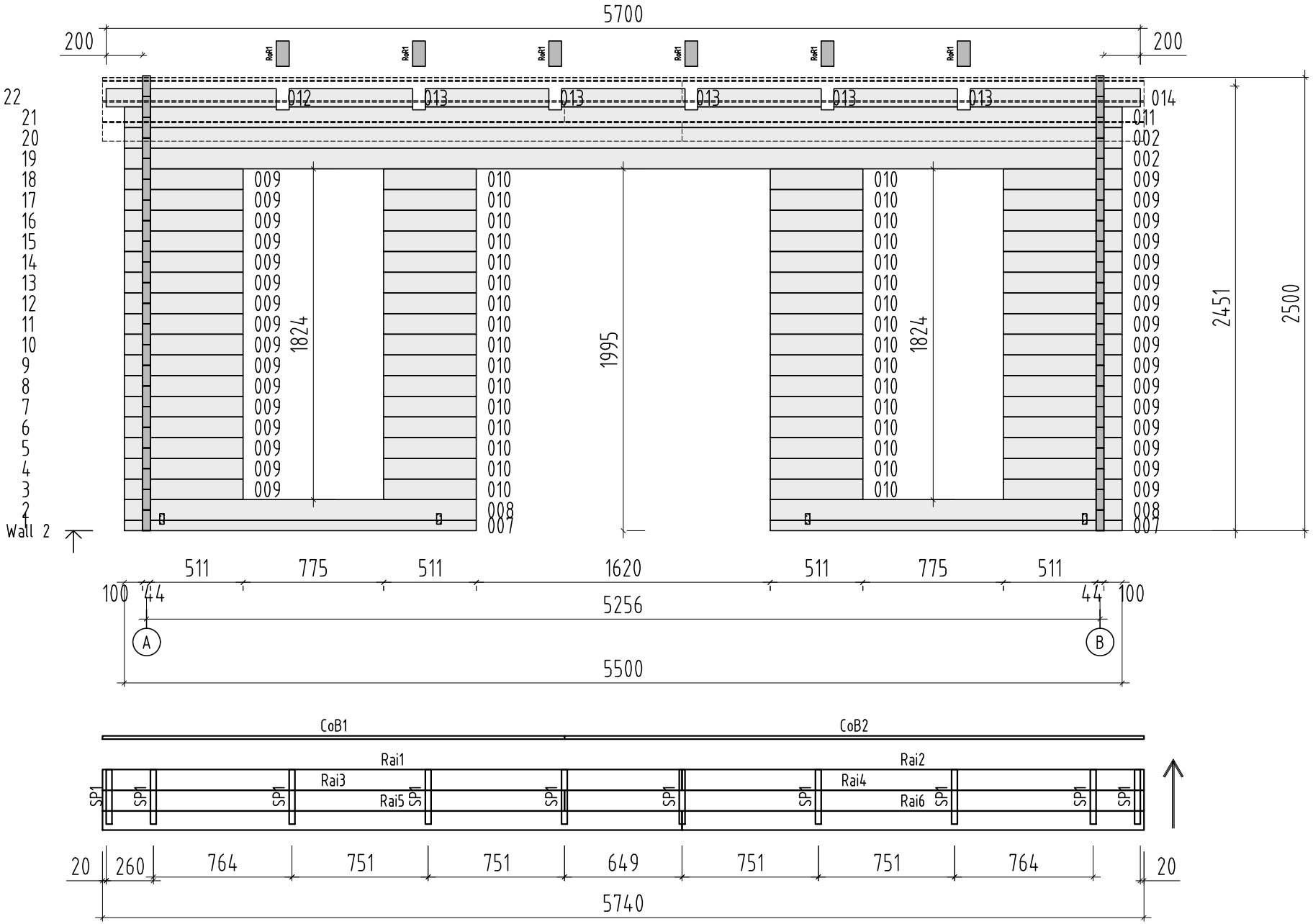
5700
200
200
RoR1
D12
D13
D14
D11
D02
D09
D10
D08
D07
22
21
20
19
18
17
16
15
14
13
12
11
10
9
8
7
6
5
4
3
2
1
Wall 2
1824
1995
1824
2451
2500
511
775
511
1620
511
775
511
100
44
5256
44
100
A
B
5500
CoB1
CoB2
Rai1
Rai2
Rai3
Rai4
Rai5
Rai6
SP1
20
260
764
751
751
649
751
751
764
20
5740

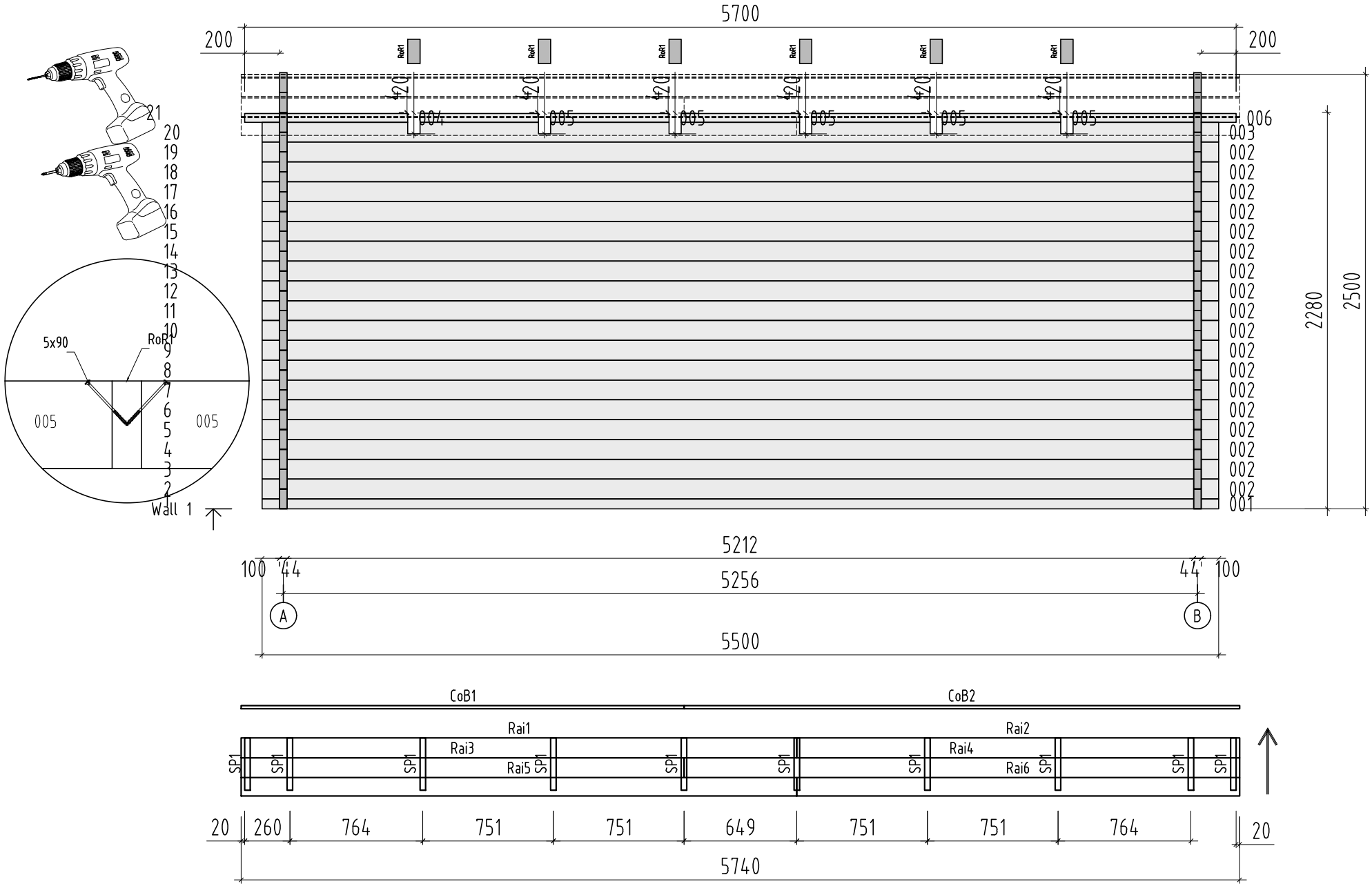
5700
200
200
RoR1
D24
004
005
006
003
002
001
2280
2500
5x90
RoR1
005
Wall 1
5212
100
44
5256
A
B
5500
CoB1
CoB2
Rai1
Rai2
Rai3
Rai4
Rai5
Rai6
SP1
20
260
764
751
751
649
751
751
764
5740

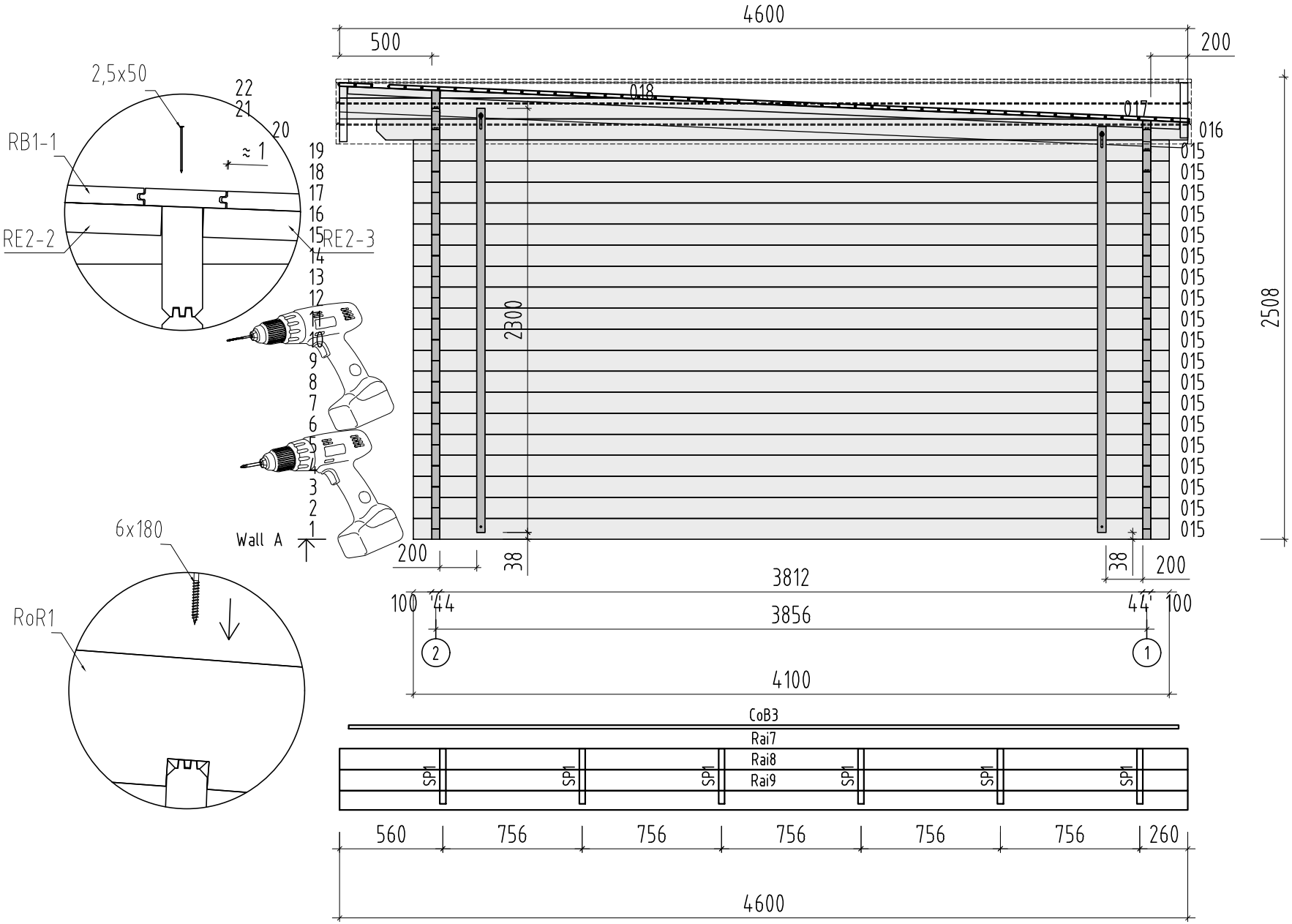
4600
500
200
2,5x50
RB1-1
RE2-2
RE2-3
≈ 1
22
21
20
19
18
17
16
15
14
13
12
11
10
9
8
7
6
5
4
3
2
1
Wall A
018
017
016
015
2300
2508
200
38
38
200
3812
100
44
44
100
3856
4100
2
1
6x180
RoR1
CoB3
Rai7
Rai8
Rai9
SP1
560
756
756
756
756
756
260
4600

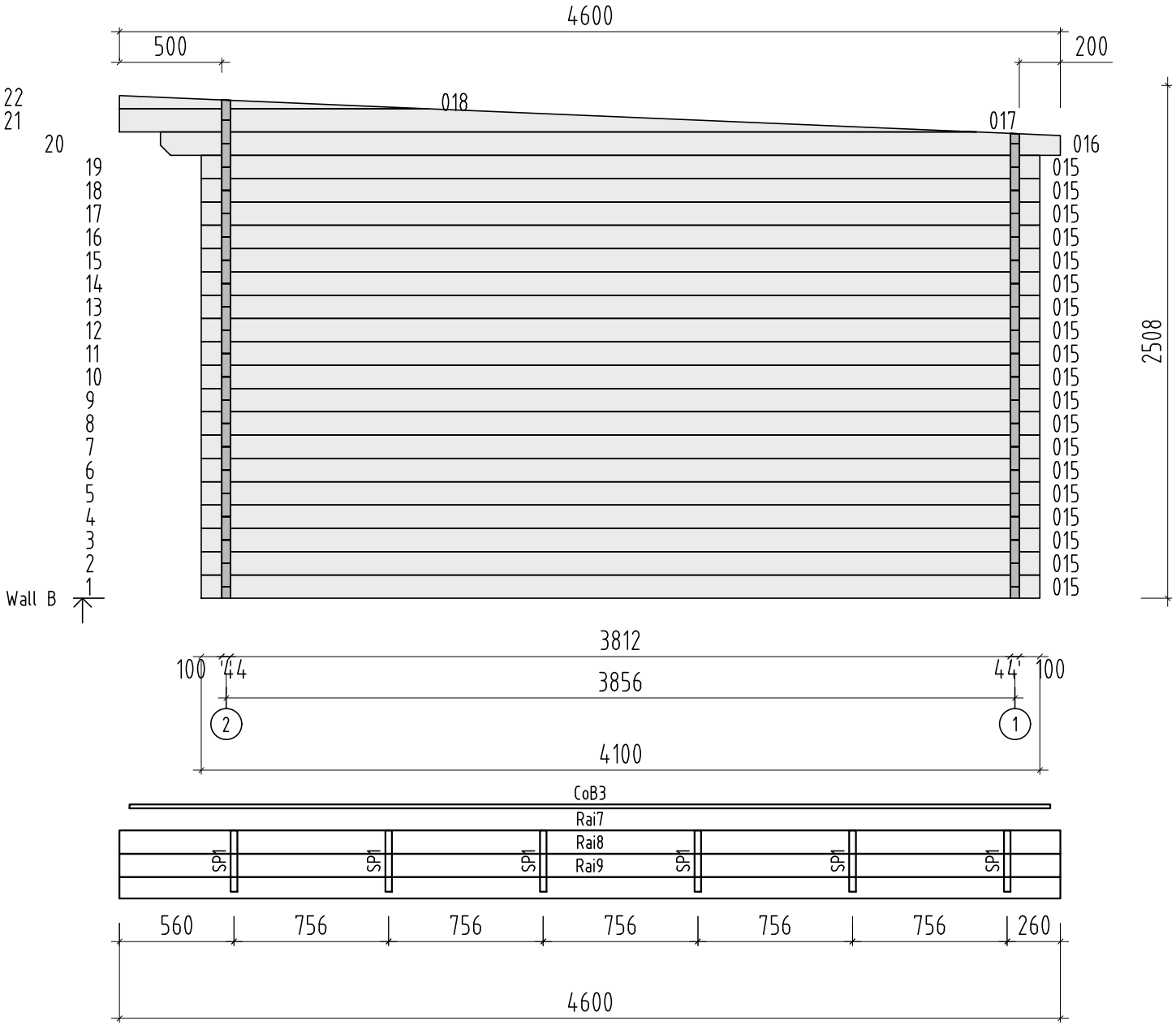
4600
500
200
22
21
20
018
017
016
19
18
17
16
15
14
13
12
11
10
9
8
7
6
5
4
3
2
1
Wall B
015
2508
3812
100
44
3856
44
100
2
1
4100
CoB3
Rai7
Rai8
Rai9
SP1
560
756
756
756
756
756
260
4600

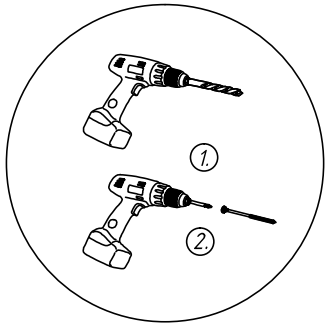

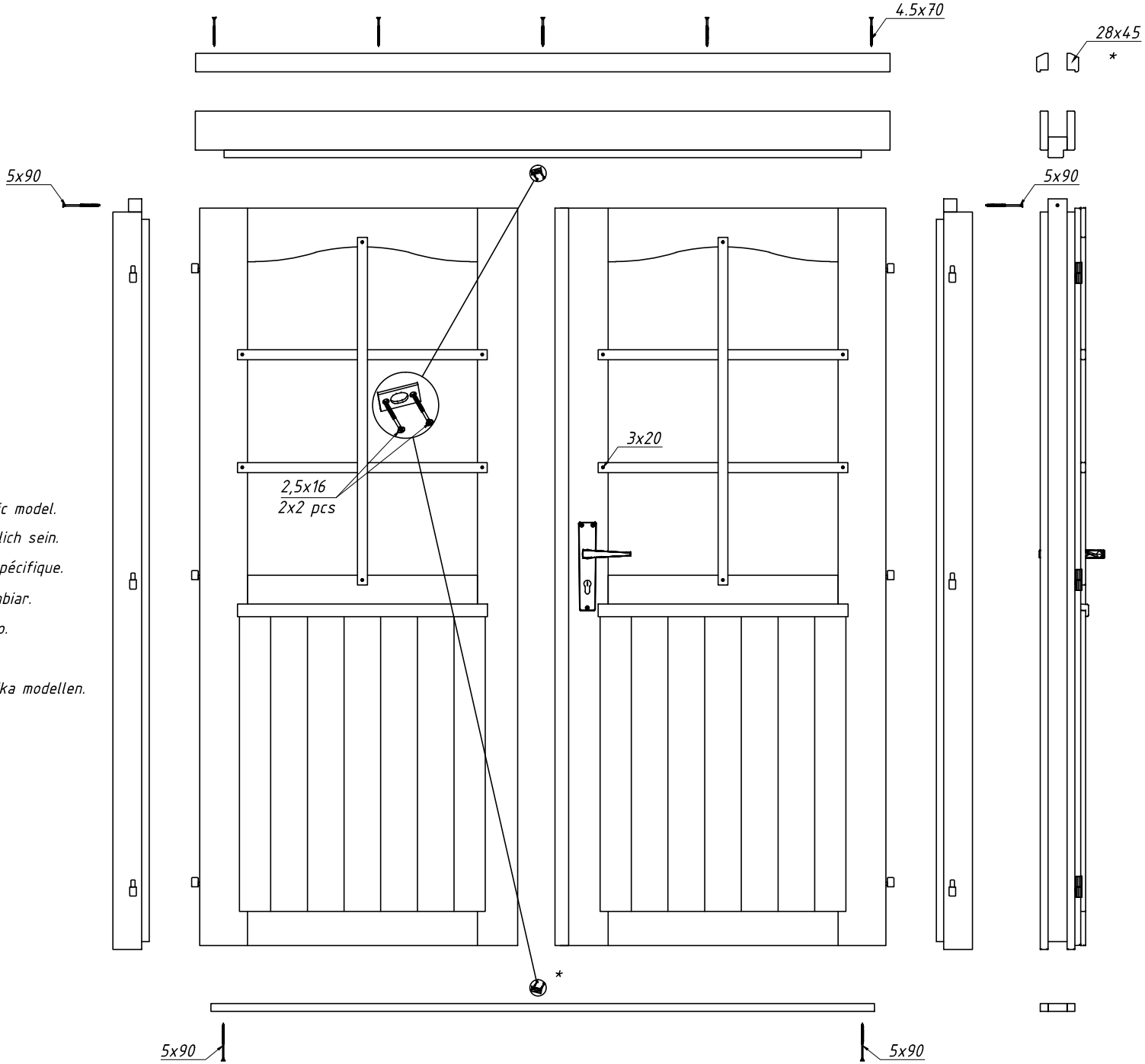

* The specification may vary depending on the specific model.
* Die Spezifikation können je nach Modell unterschiedlich sein.
* Les spécifications peuvent varier selon le modèle spécifique.
* Dependiendo del modelo, la especificación puede cambiar.
* Le specifiche possono variare a seconda del modello.
* Tekniset tiedot voivat vaihdella mallista riippuen.
* Specifikationen kan variera beroende på den specifika modellen.

1 General information

Dear client,

We are glad that you have decided in favour of our garden house!

Please read the assembly manual carefully before proceeding with the house installation! You will thus avoid problems and will not waste time.

Recommendations:

- Keep the house package until its complete assembly in a dry place, but not in direct contact with the ground, protected from weather conditions (moisture, the sun, etc.). Do not keep the house package in a heated room!
- When selecting the garden house location, make sure that the house will not be subjected to extreme weather conditions (areas of strong snowfall or winds); otherwise you should attach the house (for instance, with anchors) to the subsoil.

Warranty

Your house is made from high quality fir and delivered in the natural (unprocessed) form. If, despite our thorough inspection, you should have complaints, please submit the filled out control sheet and purchase invoice to the product seller.

ATTENTION: Please be sure to keep the documentation accompanying the house package! The control sheet includes the control number of the house. We can only review complaints if you submit the control number of the house to the seller!

<u>The warranty does not cover:</u>

- Peculiarities of wood as a natural material
- Wooden details already painted (processed with a wood preservative)
- Wooden details containing whole branches that do not endanger the stability of the house
- Colour tone variations caused by wood structure differences that do not influence wood lifetime
- Wooden details containing (caused by drying) small cracks/gaps that do not pass through and do not influence the structure of the house
- Twisted wooden details if they can nevertheless be installed
- Roof and floor boards that may have on their concealed surfaces some non-planed areas, colour differences and waning
- Complaints resulting from an incompetent manner of the installation of the house or the house subsiding due to an incompetently made foundation
- Complaints caused by introducing self-initiative changes to the house, such as the deformation of wooden details and doors/windows due to an incompetent manner of wood processing; the attachment of storm braces too rigidly, doorframes being screwed onto wall logs, etc.

The complaints covered by the warranty are satisfied to the extent of replacing the deficient/faulty material. All other demands will be excluded!

Garden house painting and maintenance

Wood is a natural material, growing and adapting depending on weather conditions. Large and small cracks, colour tone differences and changes, as well as a changing structure of wood are not errors, but a result of wood growing and a peculiarity of wood as a natural material.

Unprocessed wood (except for foundation joists) becomes greyish after having been left untouched for a while, and can be turn blue and become mouldy. To protect the wooden details of your garden house, you must immediately process them with a wood preservative.

We recommend that you cover the floor boards in advance with a colourless wood impregnation agent, especially the bottom sides of the boards, to which you will no longer have access when the house is assembled. Only this will prevent moisture penetration.

We definitely recommend that you also process the doors and windows with a wood impregnation agent, and do that namely both inside and outside! Otherwise the doors and windows can become twisted.

After the house assembly is completed, we recommend for the conclusive finishing a weather protection paint that will protect wood from moisture and UV radiation.

When painting, use high quality tools and paints, follow the paint application manual and manufacturer's safety and usage instructions. Never paint a surface in strong sunlight or rainy weather. Consult a specialist regarding paints suitable for unprocessed softwood and follow the paint manufacturer's instructions.

Having been properly painted, your garden house's lifetime will increase substantially. We recommend that you inspect the house thoroughly once every six months.

2 Preparation for assembly

Tools and preparation of components

<u>To assemble the garden house, you will need the following tools:</u>

assembly aid

ladder

hammer

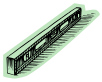 water-level

screwdriver

saw

knife

measuring tape

pliers

drill

ADVICE: To avoid splinters, we recommend that you wear the corresponding protective gloves during the assembly process.

Preparation of components:

Sort the components based on the wall plans (see Technical specifications) and place them at the four sides of the house in the installation sequence.

ATTENTION: Never place the components directly on grass or a muddy surface because it will be very difficult or even impossible to clean them up later!

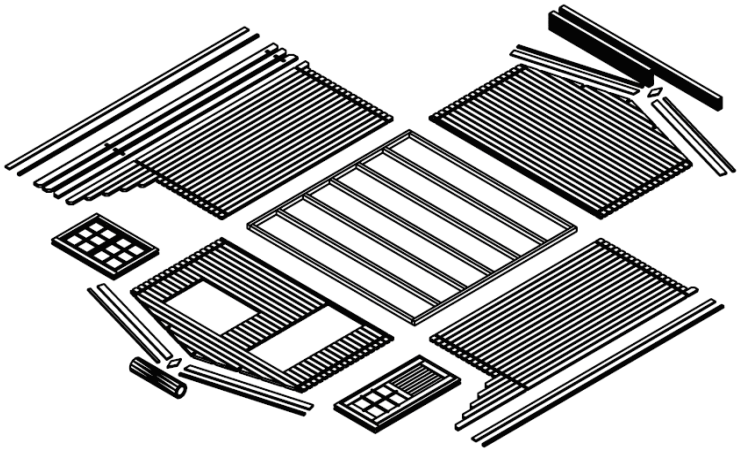

Foundation

A good foundation is the most important aspect guaranteeing the duration and safety of your house. Only a completely level, rectangular and bearing foundation will ensure problem-free installation of the house, its stability and especially the matching of the doors. With a good foundation, your house will stand for many years more.

Prepare the foundation so that its upper edge extends from the ground to a height of at least 5 cm. At the same time make sure that there are sufficient air apertures under the house floor for ventilation.

We recommend the following foundation options:

- Strip or spot foundation
- Foundation from concrete or pavement slabs
- Cast concrete bed

Prepare the foundation so that the foundation joists are propped up on every side with intervals not exceeding 50-60 cm.

Consult an expert in this field or have the foundation prepared by specialists.

3 Garden house assembly

ATTENTION:

- You will find included in the house package one spare log (longest wall log).
- You will find included in the house package one spare board (longest roof or floor board).
- The house package also includes 2-3 marked hitting blocks (wall profile approximately 20-30 cm long).

All of the details listed above ARE NOT mentioned in the specification list.

- The drawings have the details marked with three-digit position numbers. The exact positions of those details that have the third digit “x” can be found in the specification list.

Base frame (Foundation joists)

The base frame of the house must be completely flat and level to ensure that the installation proceeds without problems.

ATTENTION: different house can have different foundation placements – see the appended base frame drawing (in Technical specifications)!

Place the impregnated foundation joists on the prepared foundation in accordance with the drawing at equal intervals. Make sure that the joists are level and rectangular prior to screwing them together.

ADVICE: It is recommended to place between the foundation joists and foundation a damp-proof course that will protect the house from moisture and decay.

ADVICE: To ensure protection from wind and storm, it is recommended to attach the foundation joists to the foundation (for this, you can use for instance metal angles, anchors, etc.). The corresponding materials are not included in the supplied kit!

Installation of foundation joists:

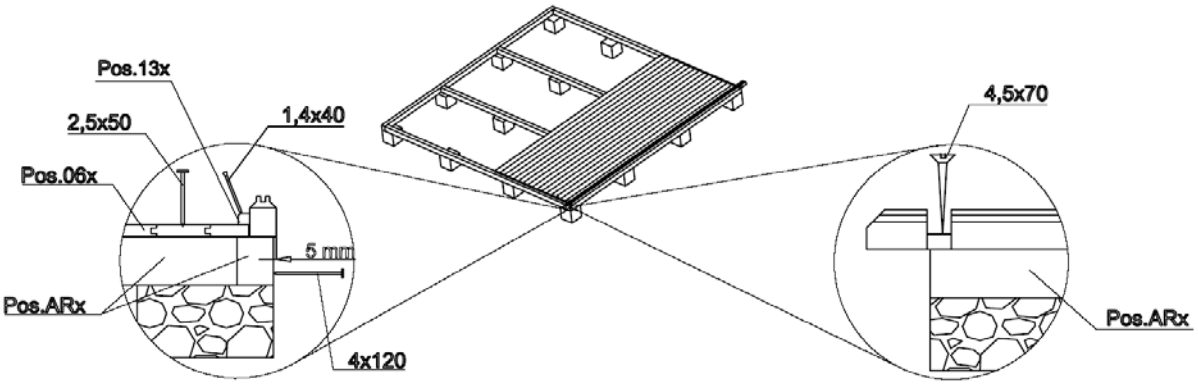

Walls

When installing the walls, it is important to remember that:

- The logs are always assembled with their tongue upwards!
- If necessary, use the hitting block and hammer! Never directly hit the tongue with the hammer!

Install the walls in accordance with the appended wall plans (see Technical specifications).

First of all place half logs of front and back wall at the correct location and attach them with screws to the foundation joists. Then install the side wall logs. Make sure that the first layer of logs extends a bit over the foundation joists: the logs must extend over the joists by some 3-5 mm. You will thus protect the house from moisture, allowing the free flow of rainwater into the ground.

ATTENTION: After the first layer of logs, measure the diagonal lengths and, if necessary, re-install the logs. Only if the diagonal lengths are completely equal is the base frame rectangular and you can mutually attach the logs.

The first layer of logs:

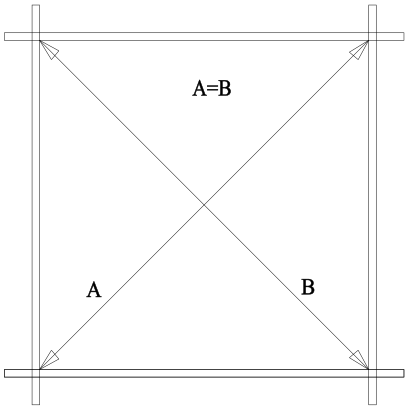

Continue the installation of the walls by strongly forcing the wall logs into one another. If necessary, use the hitting block and hammer. At the same time, do not forget to begin the installation of the door and windows. You should definitely begin the door installation after the 5th-6th layer of logs.

Door and window

Doorframe:

- If it is a double door, the doorframe is supplied in separate parts due to transportation requirements and you will have to begin by assembling it.
- To do this, place together the 4 parts of the frame and screw them onto one another.
- Make sure that the part of the frame with the deeper notch is installed upwards. The lateral jamb parts have hinges and are mirrored.
- It is recommended to install the leaves later.
- If it is a single door, its frame and leaf are supplied already assembled.

Doorframe installation (Only necessary for a double door!):

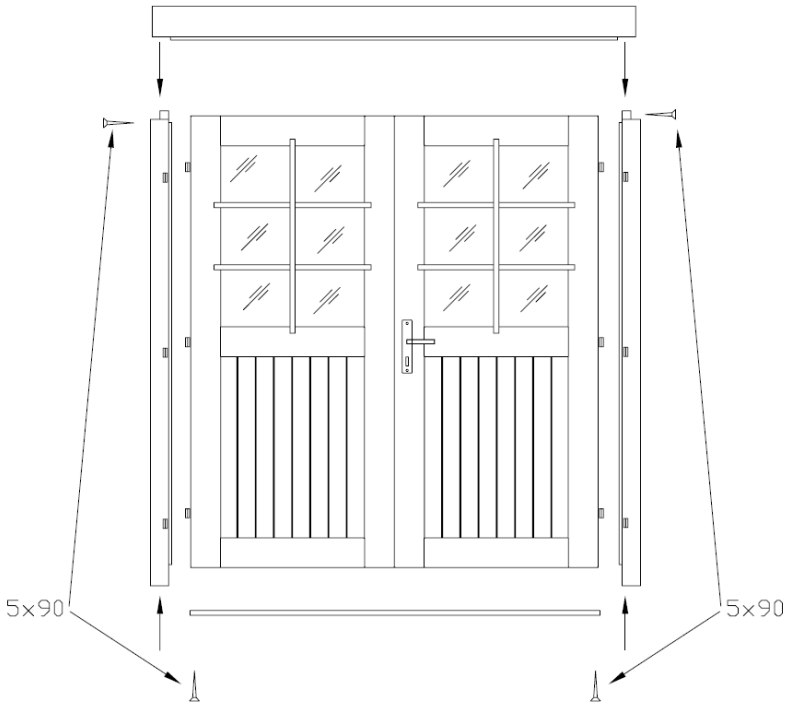

Door installation:

The doorframe is placed at the formed aperture and pushed with force onto the lower log. If it is a double door, place the leaves on the hinges now. To open and close the door, fit the separately packaged lock and handle.

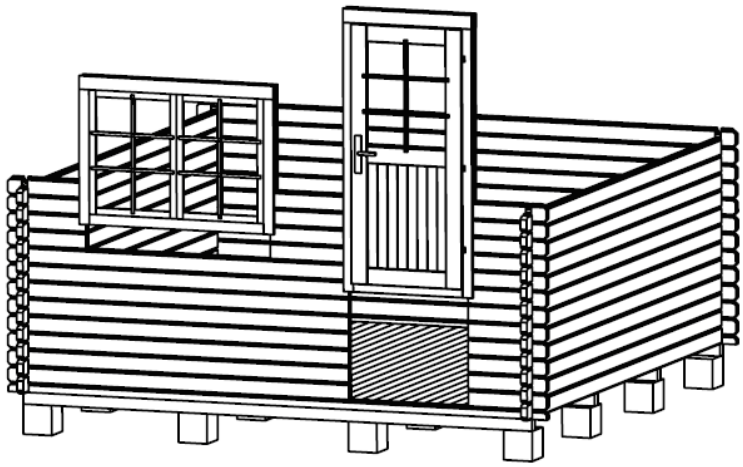

Window installation:

Continue with the installation of the wall logs until you reach the window height. The wall plans (see Technical specifications) show how many logs go under the window. Install the window similarly with the door. Just like the door, push the window frame with the window into the window aperture onto the lower log, applying force. Make sure that the window is not fitted backwards (topsy-turvy).

ADVICE: Definitely make sure that the windows and doors open in the proper direction. The doors always open from the inside **to the outside**. The revolving-tilting windows open **to the inside**. The revolving and the slinging windows open **to the outside** (the window handles are on the inside).

ATTENTION: It is not necessary to fix the doors and windows to the wall logs! If you wish to do this, it will be sufficient to fix them with a couple of screws in the lower part of the frame because as they dry, the wall logs will begin subsiding.

You can conduct the final adjustments of the doors and windows only some 2-3 weeks after the house installation, when the house will have become adapted to weather conditions and its logs settled.

Apex

In most cases, the apex is supplied in one piece (attention: in some house options, the apex can comprise several parts! In this case, these parts will have to be screwed together prior to other actions). Having installed the last wall logs, place the apex on the front and back walls and attach them with screws.

The apexes have indents for the rafters. The rafters also have the corresponding indents, ensuring that the roof is placed firmly and in the right place.

Now place the rafters in the corresponding indents in the apexes.

Make sure that the upper wall log, apexes and rafters are level. Having fitted the rafters, screw them onto the apex from above.

Installation of rafters:

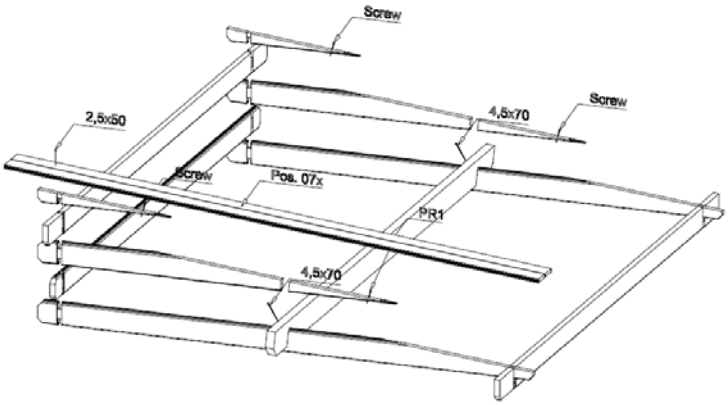

ATTENTION: If the wall logs are not properly pressed on top of one another without gaps, the upper wall log may not be on the same level with the apexes. In this case you should tap the wall logs downwards as necessary or plane the apex or sidewall log somewhat lower.

Roof

Before installing the roof boards, make sure that the house is completely level. Use the water-level to check all walls.

ATTENTION: When placing the roof, use a stable ladder. Do not step on the roof as the structure is suitable to sustain only an even load (snow, wind, etc.), and not a point load!

Begin the installation of the roof boards **from the front edge of the roof**. Tap the boards lightly and attach them from above and below with nails to the rafters and upper wall log.

ATTENTION: Do not press the roof boards together too densely and you will avoid moisture-causing bulging! Leave an interval of about 1 mm between the boards to allow for swelling.

- During the whole process of installing the roof boards, make sure that their crest rafters coincide and the eave sides of the boards extend at a uniform distance. Verify this with a rope or the lateral eave lath that you may install for verification purposes.
- The roof boards must be even with the rafter ends in front and behind. If necessary, saw both last roof boards so narrow that they are even with the rafter ends.

Having installed the roof boards, the roof felt and roof slats must be attached.

The table of components shows whether the roof cover material and slats are included with this house option!

First of all, screw the roof edge reinforcements and eave edgings under the roof board ends. Then install the roof cover material.

Installation of roof slats:

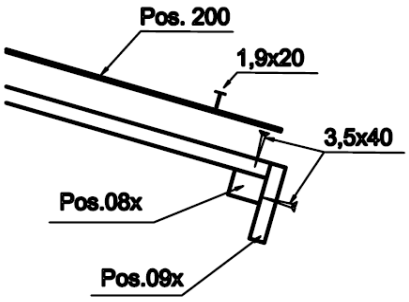

Roof cover material (NB! Some house options do not include it in the kit!)

Cut the roof felt in accordance with the roof length into suitable pieces and begin installing them parallel to the lower edge of the roof, moving toward the crest and placing the felt strips in the direction from the back wall to the front wall. The felt should extend from the edge by approximately 2-4 cm. Attach the roof felt to the roof boards with the supplied felt nails at intervals of about 15 cm. Make sure that the felt strips overlap by at least 10 cm.

Floor

Only when the house is built completely you can install the floor boards, thus avoiding unnecessary smudging on the floor.

Place the floor boards on the base frame, tap them lightly against one another and then nail them with force to the foundation joists. If necessary, cut the last floor board to the suitable width.

The final operation is the fitting of the floor beadings to cover the spaces between the floor boards and walls. If necessary, cut the floor beadings to the suitable length.

ATTENTION: Depending on the climate at the house location, the floor boards can either swell or diminish. If the floor boards are very dry while the climate is damp, they will easily absorb moisture. In this case, the floor boards should not be attached very densely to avoid likely bulging. Leave some space (1-2 mm) between the floor boards to allow for swelling. But if your climate is warm and dry, you can install the boards densely because they will become drier and spaces may appear between them.

Storm braces (NB! Not included in some house option kits!)

Attach the storm braces (if included in the supplied kit) to the inner sides of the front (2 units) and back (2 units) walls with the supplied bolts. It is important for the logs to be drilled through in advance. Please keep the distances indicated in the drawing so that no problems occur due to wood swelling or diminishing.

ADVICE: Make sure that the storm braces are attached to the apex log from above and to the middle of the first full-length wall log from below. If necessary, shorten the upper ends of the slats.

Do not turn the screws tightly so wood can further swell or diminish.

With the house having settled, you should adjust the attachments so the wall logs can settle.

Installation of storm braces:

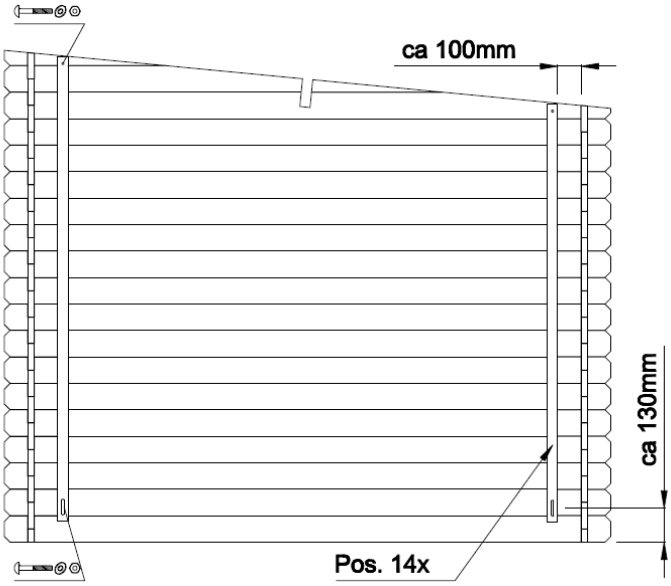

General advice:

Problem:	***Gaps appear between the wall logs***
Cause:	Additional details are attached to the house that do not allow wood to swell/diminish.
Solutions:	If the door/window is attached to the wall logs with screws/nails, remove these screws/nails; If the storm brace is screwed on too tightly, loosen its attachment; If (rain water) pipes are installed on the wall, loosen their attachments;

Problem:	***The doors and windows become stuck.***
Cause:	The house/foundation has settled.
Solution:	Check whether the house is level. Level the foundation joists and walls.
Cause:	The doors and windows have swelled due to moisture.
Solution:	Adjust the door and window hinges; if necessary, plane the door or window narrower.

We wish you total success with the garden house installation and much joy with this house for many years to come!